SIEMENS

OEM

ACVATIX™

Electromotoric actuators

SSB319
SSB819
SSB619

for small valve types VVP459.., VXP459.., VMP459..
(DN ≤ 25, k_{VS} ≤ 6,3 m^3/h)

- **SSB319 operating voltage AC 230 V 3-position control signal**
- **SSB819 operating voltage AC 24 V 3-position control signal**
- **SSB619 operating voltage AC / DC 24 V DC 0…10 V control signal**
- **Nominal force 200 N**
- **Nominal stroke 5.5 mm**
- **Automatic identification of valve stroke**
- **Direct mounting with union nut, no tools required**
- **Plug-in cable for supply voltage and control signal**
- **Manual override and position indication**
- **Parallel connection of multiple actuators possible**
- **Display of current position**

Use

For the operation of two-port and three-port valves, types VVP459.., VXP459.. (k_{vs} ≤ 6.3 m^3/h) and VMP459.., especially for fan-coil units, induction units and chilled ceilings.

Type summary

Standard versions

Type reference	Operating voltage	Run time at 50 Hz	Control signal	Connecting cable [1]
SSB319	AC 230 V	150 s	3-position	2.5 m
SSB819	AC 24 V			
SSB619	AC / DC 24 V	75 s	DC 0…10 V	

[1] SSB819/SSB619 Plug connection between cable and actuator. Connection by customer, ends of wires stripped, with cable end sleeves.

Accessories

Type reference	Description
ASY98	Retaining screw for terminal block connectors.

Ordering

Example:

Type	*Stock no.*	*Description*	*Quantity*
SSB819	SSB819	Electromotoric actuator	2
ASY98	ASY98	Retaining screw	2

Delivery

Actuators, valves and accessories are packed separately. Items are supplied individually packed.

Rev.-No.

Overview tables, see page 7.

Equipment combinations

Type reference	Valve type	k_{vs} [m^3/h]	PN class	Data sheet
VVP459..	2-port valves	0.63…6.3	PN 16	Q4845
VXP459..	3-port valves			
VMP459..	3-port valves with T-bypass	0. 63…4.0		

k_{vs} = nominal flow rate of cold water (5...30 °C) through the fully open valve (H_{100}) at a differential pressure of 100 kPa (1 bar)

Function / mechanical design

When the actuator is driven by DC 0…10 V control voltage or by a 3-position signal, it produces a stroke which is transmitted to the valve stem.
The description of operation in this document applies to the valve versions which are fully closed when de-energized (NC valves).

3-position control signal
SSB319/SSB819

- Voltage at Y1: Stem extends Valve opens
- Voltage at Y2: Stem retracts Valve closes
- No voltage at Y1 and Y2: Actuator maintains its current position

DC 0...10 V control signal
SSB619

- The valve opens / closes in proportion to the control signal at Y.
- At DC 0 V, the valve V..P459.. is fully closed (A → AB).
- When power supply is removed, the actuator maintains its current position.

Features and benefits

- Plastic housing
- Locking-proof, maintenance-free gear train
- Manual override with hexagonal socket wrench 3 mm
- Reduced power consumption in the holding positions
- Load-dependent switch-off in the event of overload and in stroke end positions
- Parallel operation of 6 SSB319, 24 SSB819 and 10 SSB619 possible, provided the controllers' output is sufficient
- Terminal block connectors for customer made cables available
  (only for use with AC 24 V and AC / DC 24 V actuators)
- Connecting cables with AC 24 V and AC 230 V connectors cannot be mixed up
- Halogen-free cables available

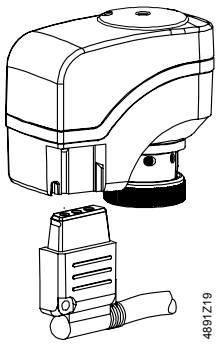

Accessories

Retaining screw
ASY98

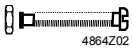

Type ASY98 to secure the cable connector.

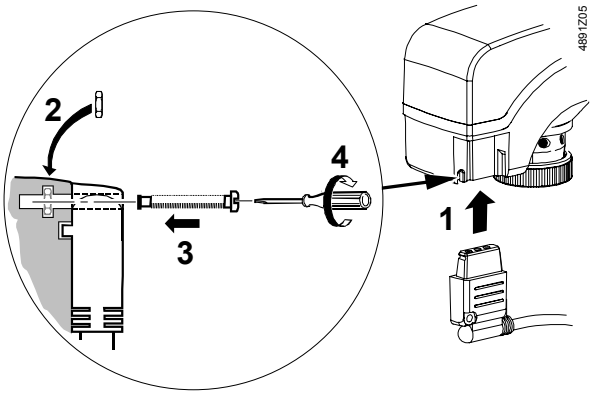

The cable connector snaps into position, but can be additionally secured with the retaining screw.

Notes

Engineering

The actuators must be electrically connected in accordance with local regulations (refer to «Connection diagrams»), page 6.

⚠ **Caution**

Regulations and requirements to ensure the safety of people and property must be observed at all times!

The permissible temperatures (refer to «Technical data», page 5) must be observed. The connecting cable of the actuator may come into contact with the hot valve body, provided the temperature of the valve body does not exceed 80 °C.

Mounting

The Mounting Instructions 4 319 5613 0 are enclosed in the product packaging. Assembly is made with the union nut; no tools or adjustments are required. The actuator must be fitted in position 0 (also refer to «Manual override», page 4) without operating voltage.

Orientation

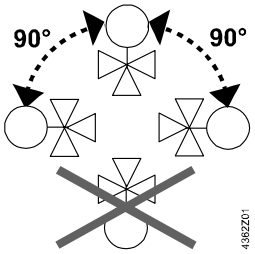

Commissioning

When commissioning, check wiring and the functioning of the actuator.

- Actuator stem extends (from position 0 to 1): Valve opens
- Actuator stem retracts (from position 1 to 0): Valve closes

Self-calibration

⚠ **Caution**

During commissioning and whenever the operating voltage is switched on, the SSB619 runs a self-calibration routine. (Valve stroke 0 → Max. stroke → Setpoint). Never intervene manually in this process.

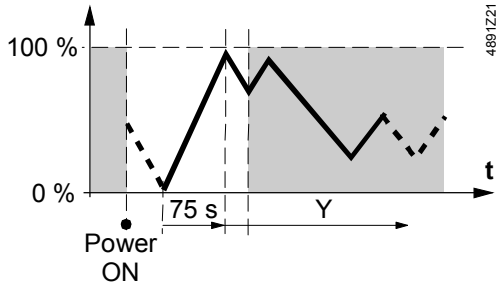

<u>Note:</u> Correct calibration is only possible

- **with valve**
- **stroke > 1.5 mm**

The second or third attempt at calibration occurs automatically after an 8-minute delay.
After three failed calibration attempts the actuator stem remains in the extended position and the V..P459.. valves are opened.
For valves with strokes < 1.5 mm, the actuator/valve combination locks after three failed calibration attempts.

Manual override

A 3 mm hexagonal socket wrench can be used to move the actuator to any position between 0 and 1. If a control signal from the controller is present, then this takes priority in determining the position.

Note

To retain the manually set position, unplug the connecting cable or switch off power and the control signal.

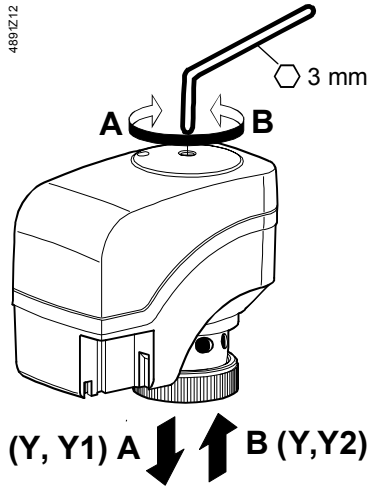

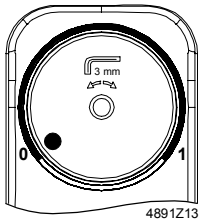

Position indicator in position 0: Valve closed

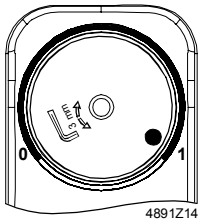

Position indicator in position 1: Valve open

Maintenance

The actuators are maintenance-free.
When carrying out service work on the plant, following must be noted:

- Turn power off (e.g. remove the plug)
- If necessary, disconnect electrical connections from the terminals
- The actuator must be commissioned only with a correctly mounted valve in place!

Repair

SSB.. actuators cannot be repaired; the complete unit must be replaced.

Disposal

The device is considered an electronics device for disposal in terms of European Directive 2012/19/EU and may not be disposed of as domestic garbage.

- Dispose of the device through channels provided for this purpose.
- Comply with all local and currently applicable laws and regulations.

Warranty

The technical data given for these applications is valid only when the actuators are used with the Siemens valves listed under «Equipment combinations», page 2.

The use of the SSB.. actuators in conjunction with third-party valves invalidates any warranty offered by Siemens Switzerland Ltd / HVAC Products.

Technical data

		SSB319	SSB819	SSB619
Power supply	Operating voltage Voltage tolerance	AC 230 V ± 15 %	AC 24 V ± 20 %	AC 24 V or DC 24 V ± 20 % ± 25 %
	Rated frequency	50 / 60 Hz		
	Max. power consumption	6 VA	0.8 VA	2.5 VA
	⚠ Fuse for incoming cable	2 A, quickblow		
Control	Control signal	3-position		DC 0...10 V
	Input impedance for DC 0...10 V			> 100 kOhm
	Parallel operation (number of actuators) [1)]	max. 6	max. 24	max. 10
Functional data	Run time for 5.5 mm stroke at 50 Hz	150 s		75 s
	Positioning speed	27.3 s/mm		13.6 s/mm
	Nominal stroke	5.5 mm		
	Nominal force	200 N		
	Perm. temperature of medium in the connected valve	1...110°C		
Electrical connections	Connecting cable of basic types	2.5 m 3-core to EN 60320 / IEC 60227		
Norms and directives	Electromagnetic compatibility (Application)	For residential, commercial and light- industrial environments		
	Product standard	EN60730-x		
	EU Conformity (CE)	A5W90000895	A5W90000897	A5W90000896
	RCM Conformity	A5W90000910_A	A5W90000922_A	A5W90000921_A
	EAC Conformity	Eurasia Conformity		
	Protection class to EN 60730	II	III	
	Contamination level	EN 60730, Class 2		
	Housing protection Upright to horizontal	IP40 to EN 60529		
	UL approbation		UL 873	
	cUL approbation		C22.2 No. 24-93	
	Environmental compatibility	The product environmental declaration CE1E4891en01 contains data on environmentally compatible product design and assessments (RoHS compliance, materials composition, packaging, environmental benefit, disposal).		
Dimensions / weight	Dimensions	refer to «Dimensions», page 7		
	Coupling thread to valve	union nut G¾ inch		
	Weight	0.35 kg		

Housing colors	Base and cover	RAL 7035 light gray

[1] Provided the controllers' output is sufficient

General ambient conditions

	Operation EN 60721-3-3	Transport EN 60721-3-2	Storage EN 60721-3-1
Environmental conditions	Class 3K3	Class 2K3	Class 1K3
Temperature	+1...50 °C	–25...70 °C	–5...50 °C
Humidity	5...85 % r.h.	< 95 % r.h.	5...95 % r.h.

Connecting cable

SSB319

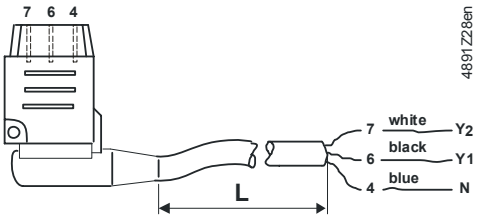

7	White	Y2	Control signal CLOSE (AC 230 V)
6	Black	Y1	Control signal OPEN (AC 230 V)
4	Blue	N	Neutral

L = 2,5 m

SSB819

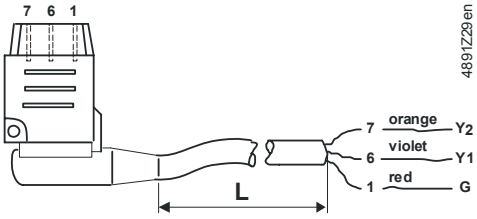

7	Orange	Y2	Control signal CLOSE (AC 240 V)
6	Violet	Y1	Control signal OPEN (AC 240 V)
1	Red	N	System potential AC 24 V

L = 2,5 m

SSB619

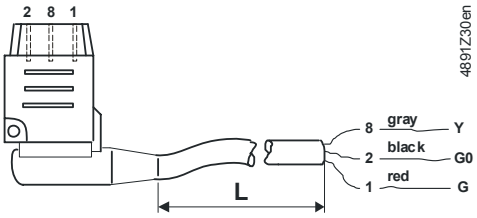

8	Grey	Y	Control signal DC 0...10 V
2	Black	G0	System neutral (- DC 24 V)
1	Red	G	System potential AC 24 V (+ DC 24 V)

L = 2,5 m

Connection diagrams

SSB319

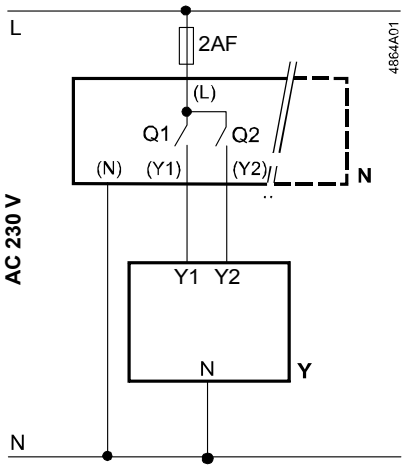

N	Controller
Y	Actuator
L	System potential AC 230 V
N	System neutral
Y1, Y2	Control signal OPEN, CLOSE
Q1, Q2	Controller contacts

SSB819

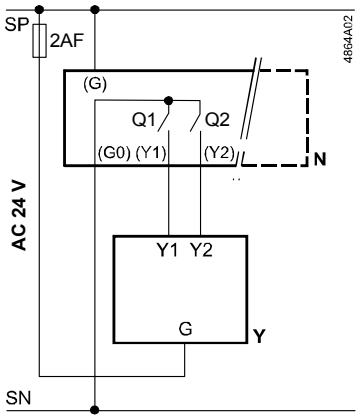

N	Controller
Y	Actuator
SP, G	System potential AC 24 V
SN, G0	System neutral
Y1, Y2	Control signal OPEN, CLOSE
Q1, Q2	Controller contacts

SSB619

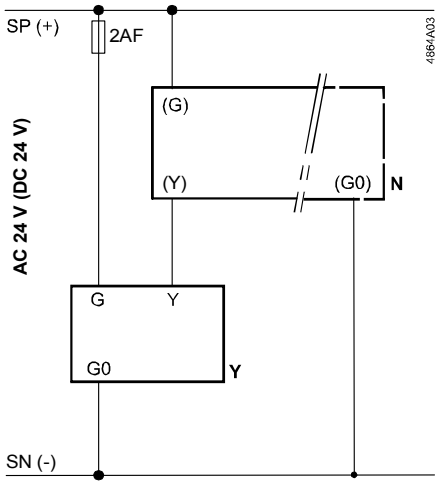

N	Controller
Y	Actuator
SP, G	System potential AC 24 V
SN, G0	System neutral
Y	Control signal DC 0…10 V

Dimensions

All dimensions in mm

SSB319
SSB819
SSB619

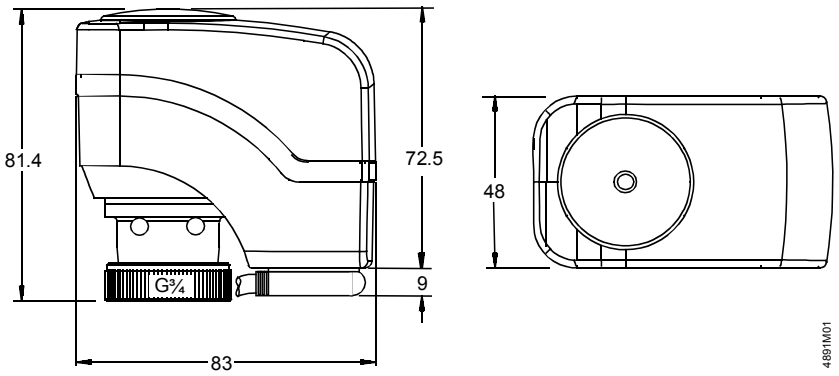

Revision numbers

Type reference	Valid from Rev.-No.	Type reference	Valid from Rev.-No.
SSB319	J	SSB619	J
SSB819	J		

Issued by
Siemens Switzerland Ltd.
Building Technologies Division
International Headquarters
Theilerstrasse 1a
CH-6300 Zug
Tel. +41 58 724 2424
www.siemens.com/buildingtechnologies

© Siemens Switzerland Ltd, 2004
Technical specifications and availability subject to change without notice.

Gtksnab
Оборудование для жизни

Мы ценим каждого клиента и предлагаем широкий ассортимент продукции. Оборудование соответствует всем директивам безопасности и имеет необходимые лицензии. Быстрая доставка по всей России и СНГ. Самовывоз со склада в Москве. Квалифицированные специалисты всегда готовы проконсультировать и помочь подобрать нужные запчасти. Доверьтесь нашему многолетнему опыту и надежности поставок! Интернет-магазин "Gtksnab".

Остались вопросы?
Нужно подобрать или заказать деталь?

Email
order@gtksnab.ru

Телефон
+7 (495)131-57-49

Whatsapp
+7(985) 991-80-53

Telegram
@gtksnab

Сайт
gtksnab.ru